US007133069B2

(12) **United States Patent**
Wallach et al.

(10) **Patent No.: US 7,133,069 B2**
(45) **Date of Patent: Nov. 7, 2006**

(54) **SYSTEM AND METHOD TO INCREASE EFFECTIVE DYNAMIC RANGE OF IMAGE SENSORS**

(75) Inventors: **Bret A. Wallach**, San Diego, CA (US); **Harvey A. Koselka**, Trabuco Canyon, CA (US)

(73) Assignee: **Vision Robotics, Inc.**, San Diego, CA (US)

(*) Notice: Subject to any disclaimer, the term of this patent is extended or adjusted under 35 U.S.C. 154(b) by 225 days.

(21) Appl. No.: **10/100,221**

(22) Filed: **Mar. 15, 2002**

(65) **Prior Publication Data**

US 2002/0176010 A1 Nov. 28, 2002

Related U.S. Application Data

(60) Provisional application No. 60/276,366, filed on Mar. 16, 2001.

(51) **Int. Cl.**
H04N 5/225 (2006.01)
H04N 5/235 (2006.01)

(52) **U.S. Cl.** **348/218.1**; 348/229.1

(58) **Field of Classification Search** 348/229.1, 348/362, 221.1, 218.1; 382/284
See application file for complete search history.

(56) **References Cited**

U.S. PATENT DOCUMENTS

4,868,752	A *	9/1989	Fujii et al.	701/28
5,101,276	A *	3/1992	Ohta	348/221.1
5,247,366	A *	9/1993	Ginosar et al.	348/256
5,309,243	A *	5/1994	Tsai	348/221.1
5,517,242	A	5/1996	Yamada et al.	
5,712,682	A	1/1998	Hannah	
5,801,773	A *	9/1998	Ikeda	348/229.1
5,818,975	A	10/1998	Goodwin et al.	
5,828,793	A *	10/1998	Mann	382/284
5,929,908	A	7/1999	Takahashi et al.	
5,969,761	A	10/1999	Takahashi et al.	
6,040,858	A	3/2000	Ikeda	
6,184,933	B1	2/2001	Ogura	
6,204,881	B1 *	3/2001	Ikeda et al.	348/362
6,374,155	B1	4/2002	Wallach et al.	
2002/0176010	A1 *	11/2002	Wallach et al.	348/229.1

FOREIGN PATENT DOCUMENTS

JP	63306777	12/1988
WO	WO 01/37060 A1	5/2001

OTHER PUBLICATIONS

Duda et al., "Pattern Classification and Scene Analysis," John Wiley & Sons, table of contents, 1973.
Horn, "Robot Vision," MIT Press and McGraw-Hill, table of contents, 1986.
Bergholm et al., "A 'Theory' of Optical Flow," Computer Visions, Graphics, and Image Processing: Image Understanding, vol. 53, pp. 171-188, Mar. 1991.

(Continued)

Primary Examiner—David Ometz
Assistant Examiner—James M. Hannett
(74) *Attorney, Agent, or Firm*—Knobbe Martens Olson & Bear, LLP

(57) **ABSTRACT**

A system and method of increasing the dynamic range of image sensors by controlling the exposure (either electronically or mechanically) of multiple images and optionally forming a composite image from the properly exposed areas of the multiple images of varying exposure settings. Certain embodiments of the system and method utilize image processing techniques to determine the various exposure settings and to form the optional composite image. The properly exposed areas can be used directly by machine vision applications.

99 Claims, 12 Drawing Sheets

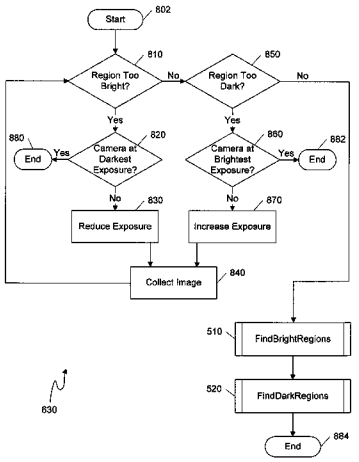

OTHER PUBLICATIONS

Klette et al., "Computer Vision," Springer-Verlag Singapore Pte. Limited, table of contents, 1998.
Umbaugh, "Computer Vision and Image Processing: A Practical Approach Using CVIPtools," Prentice Hall, table of contents, 1998.
Baker et al., "Super-Resolution Optical Flow," Tech Report CMU-RI-TR-99-36, Robotics Institute, Carnegie Mellon University, Oct. 1999.
Debevec et al., "Recovering High Dynamic Range Radiance Maps from Photographs," Computer Science Division, University of California at Berkeley, 1997.

* cited by examiner

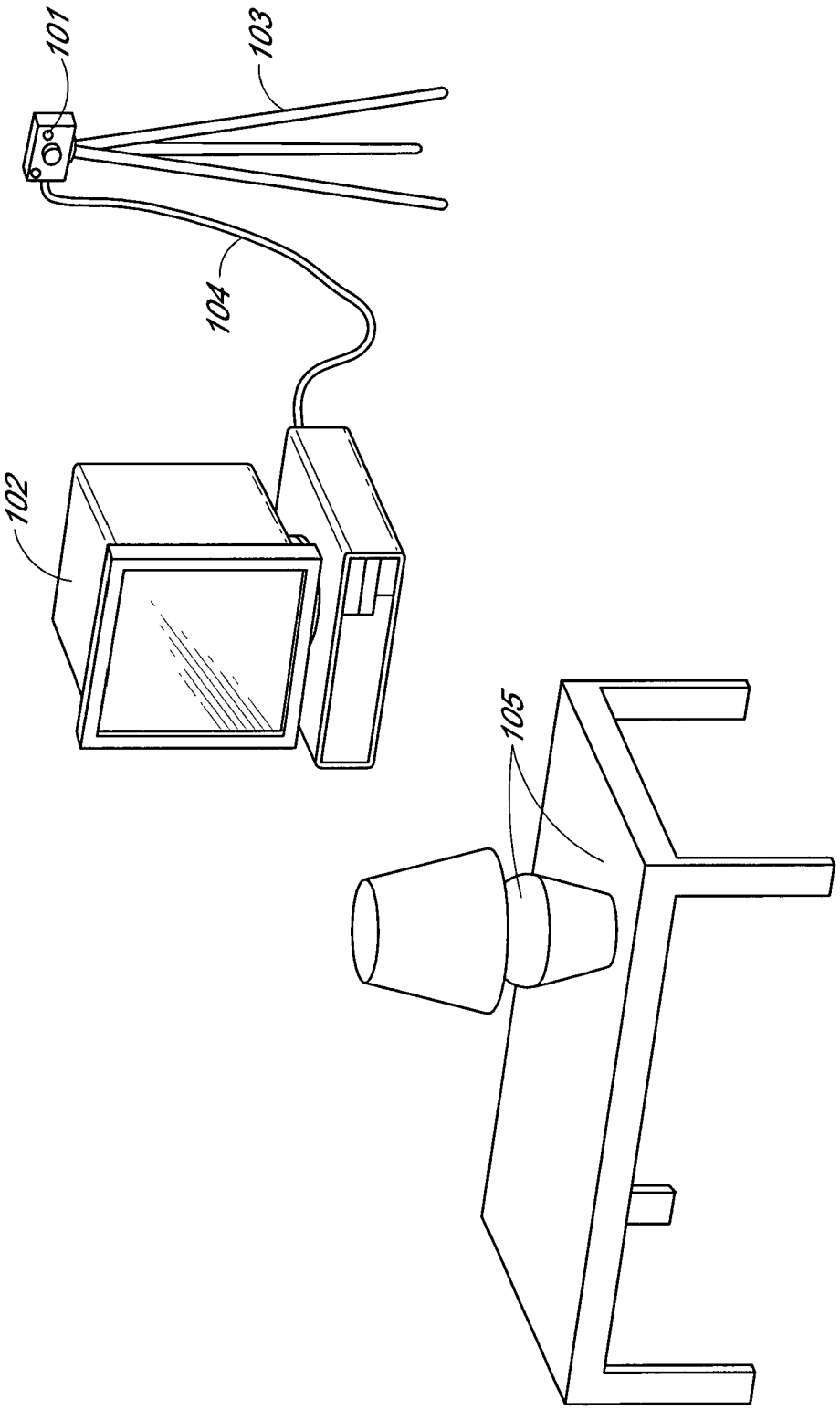

FIG. 1A

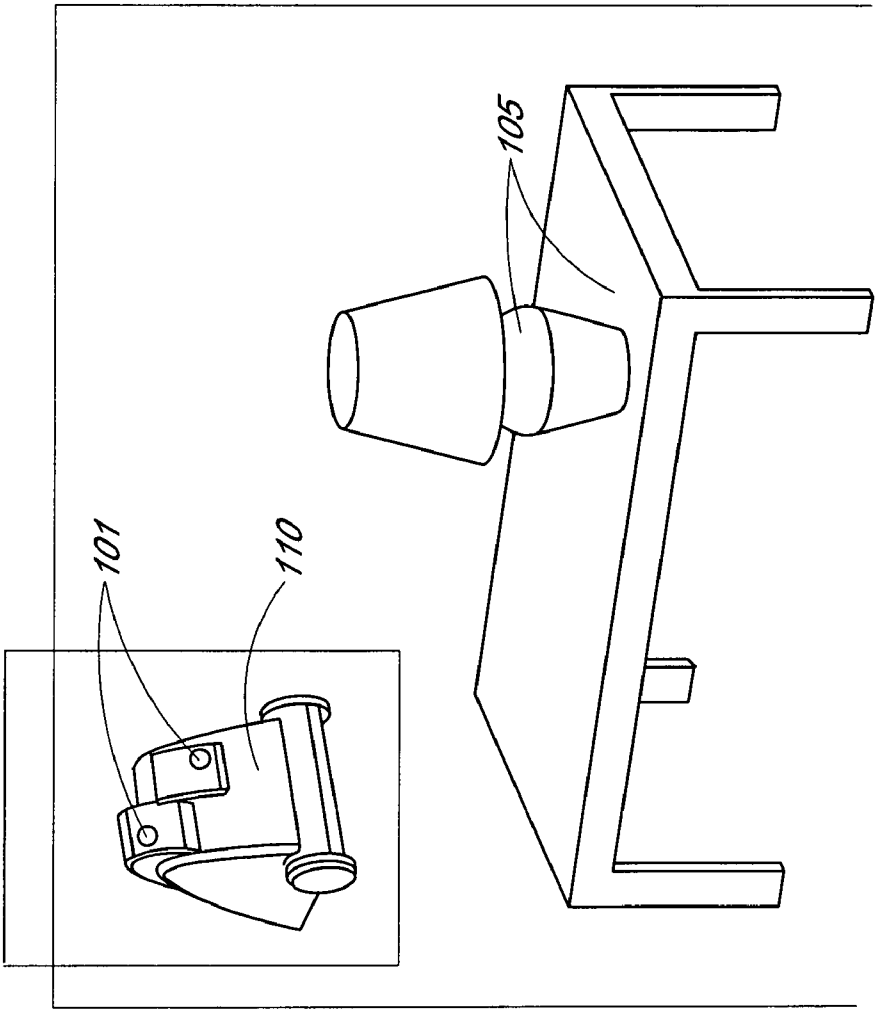

FIG. 1B

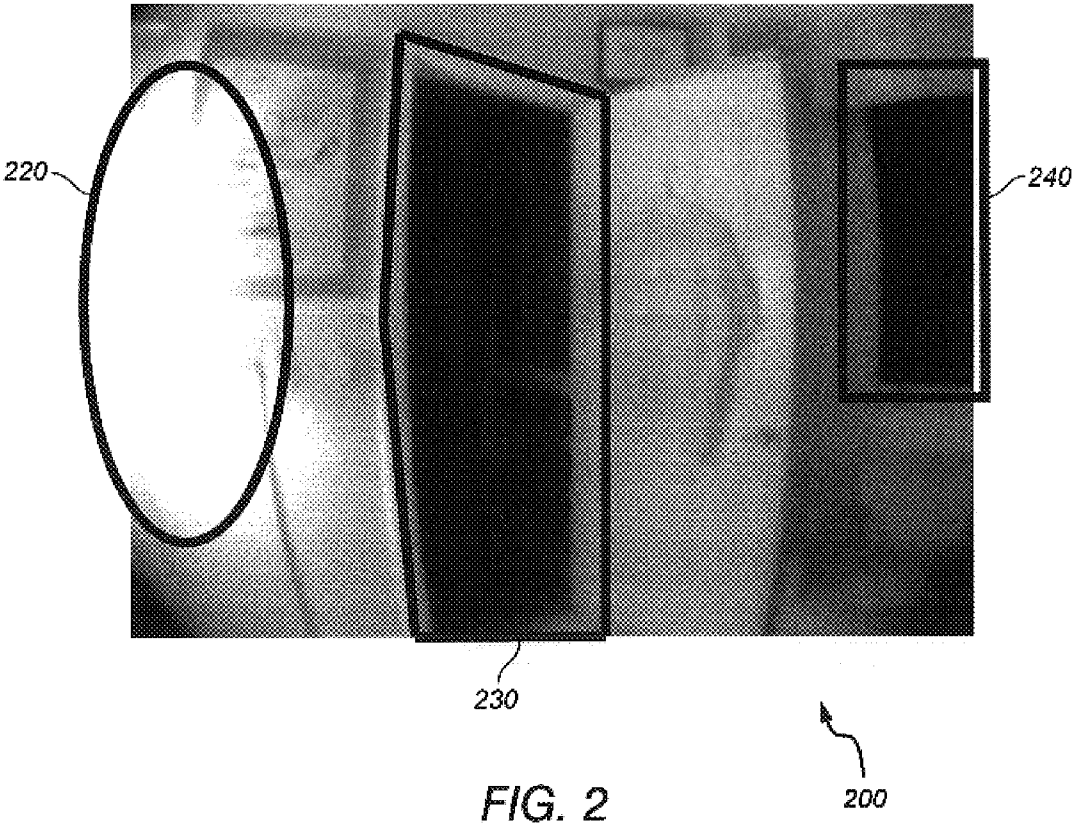

FIG. 2

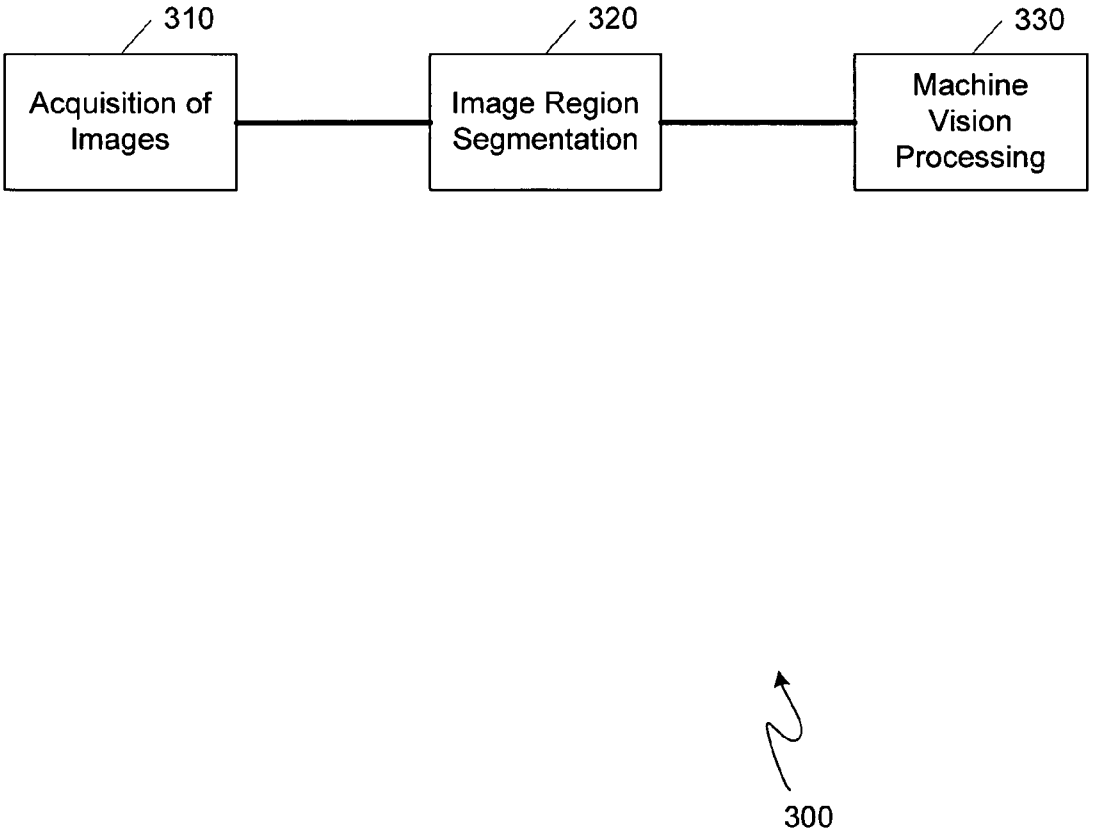
310
Acquisition of Images
320
Image Region Segmentation
330
Machine Vision Processing
300

FIG. 3

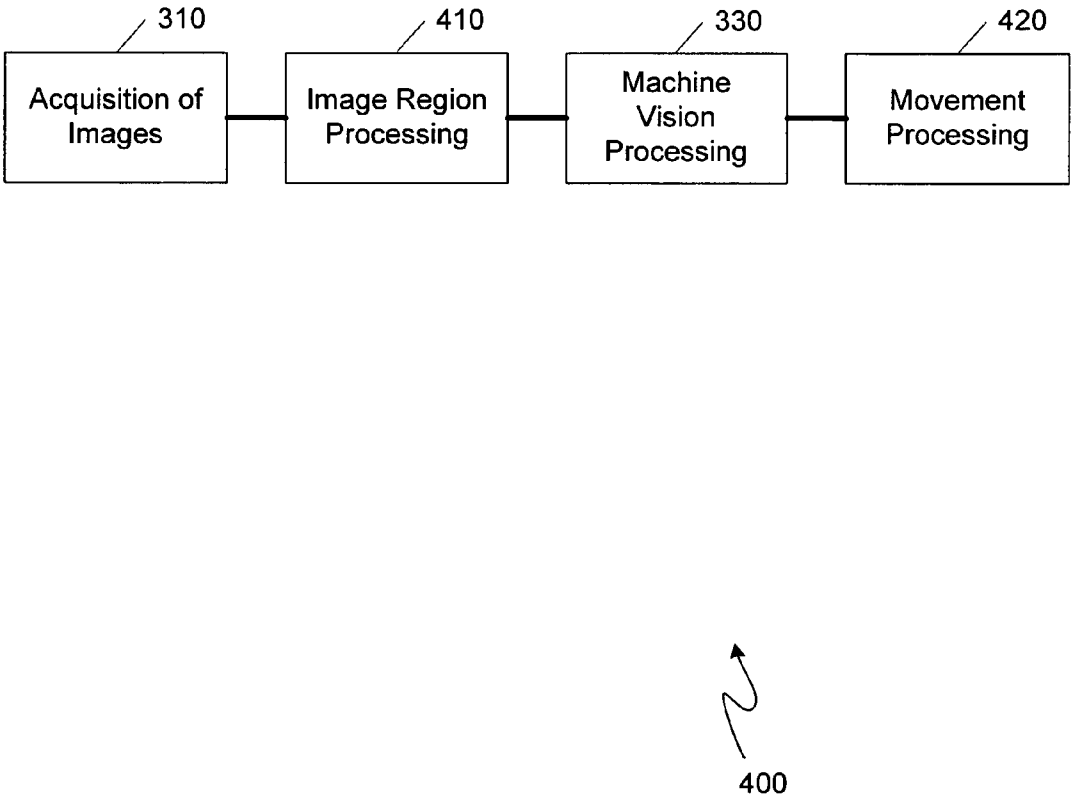
310
Acquisition of Images
410
Image Region Processing
330
Machine Vision Processing
420
Movement Processing
400

FIG. 4

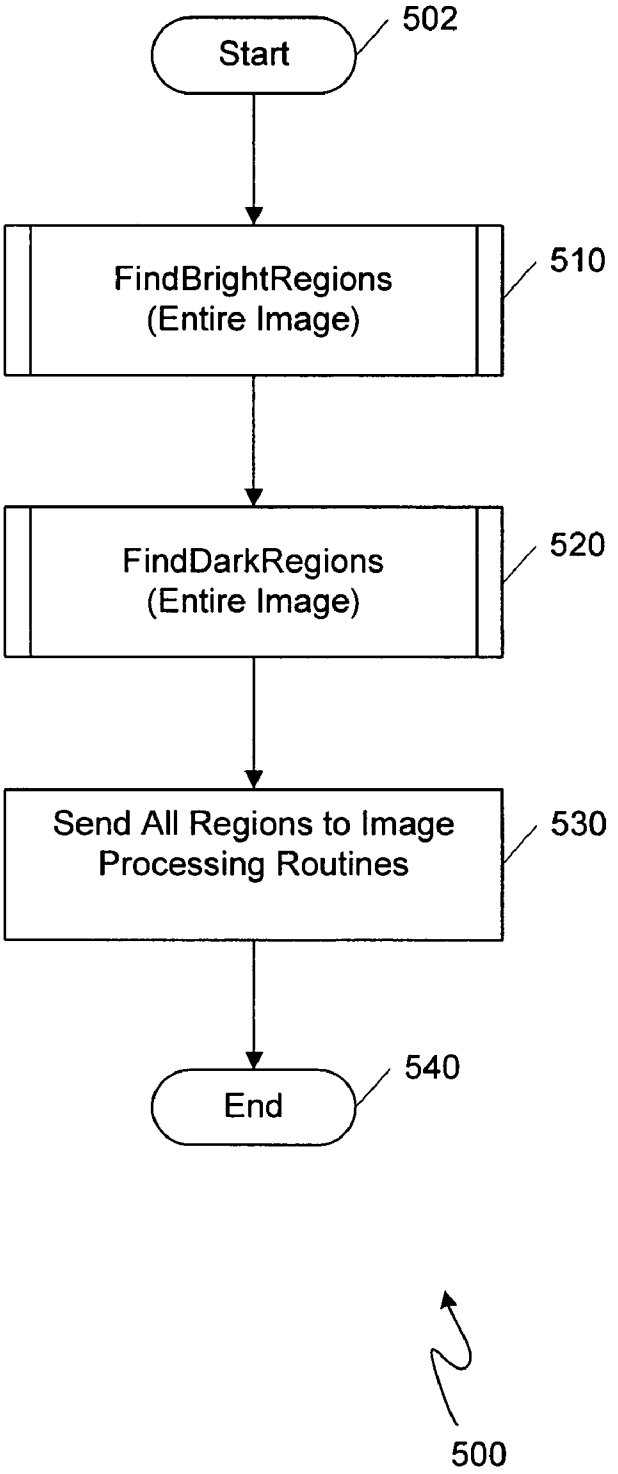
Start
502
FindBrightRegions
(Entire Image)
510
FindDarkRegions
(Entire Image)
520
Send All Regions to Image
Processing Routines
530
End
540
500

FIG. 5

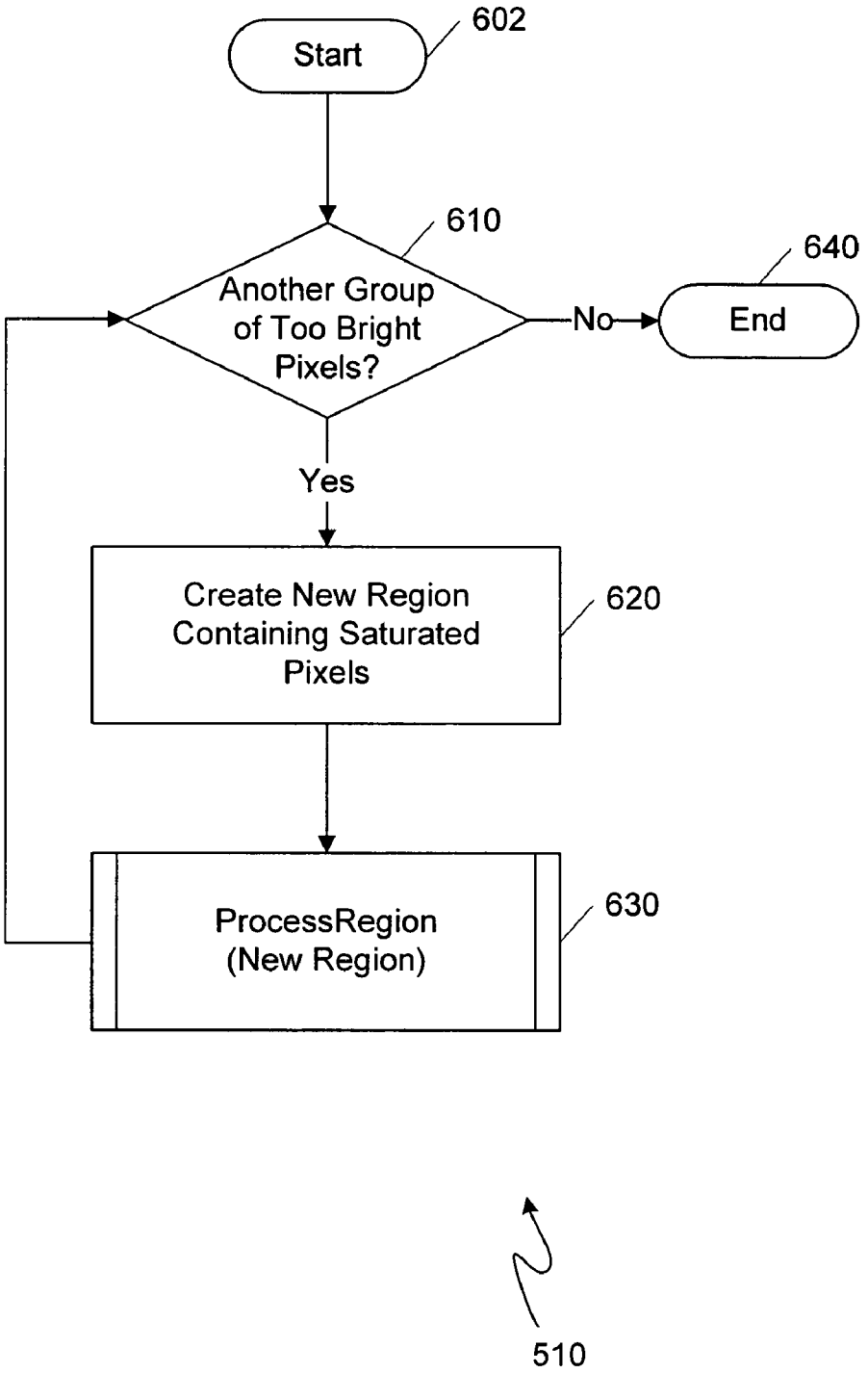
Start
602
610
Another Group of Too Bright Pixels?
No
640
End
Yes
Create New Region Containing Saturated Pixels
620
ProcessRegion (New Region)
630
510

FIG. 6

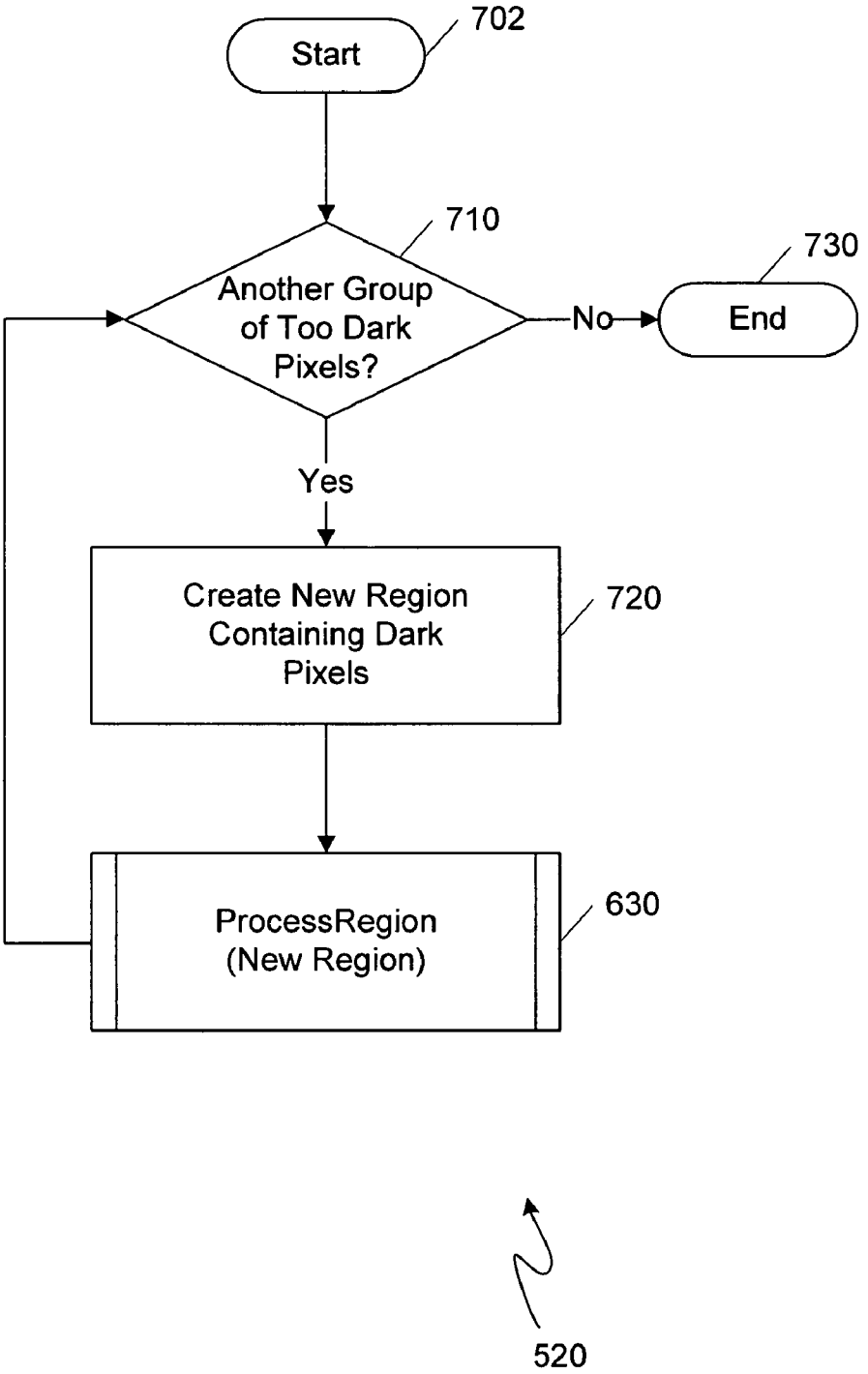
Start
702
710
Another Group of Too Dark Pixels?
No
End
730
Yes
Create New Region Containing Dark Pixels
720
ProcessRegion (New Region)
630
520

FIG. 7

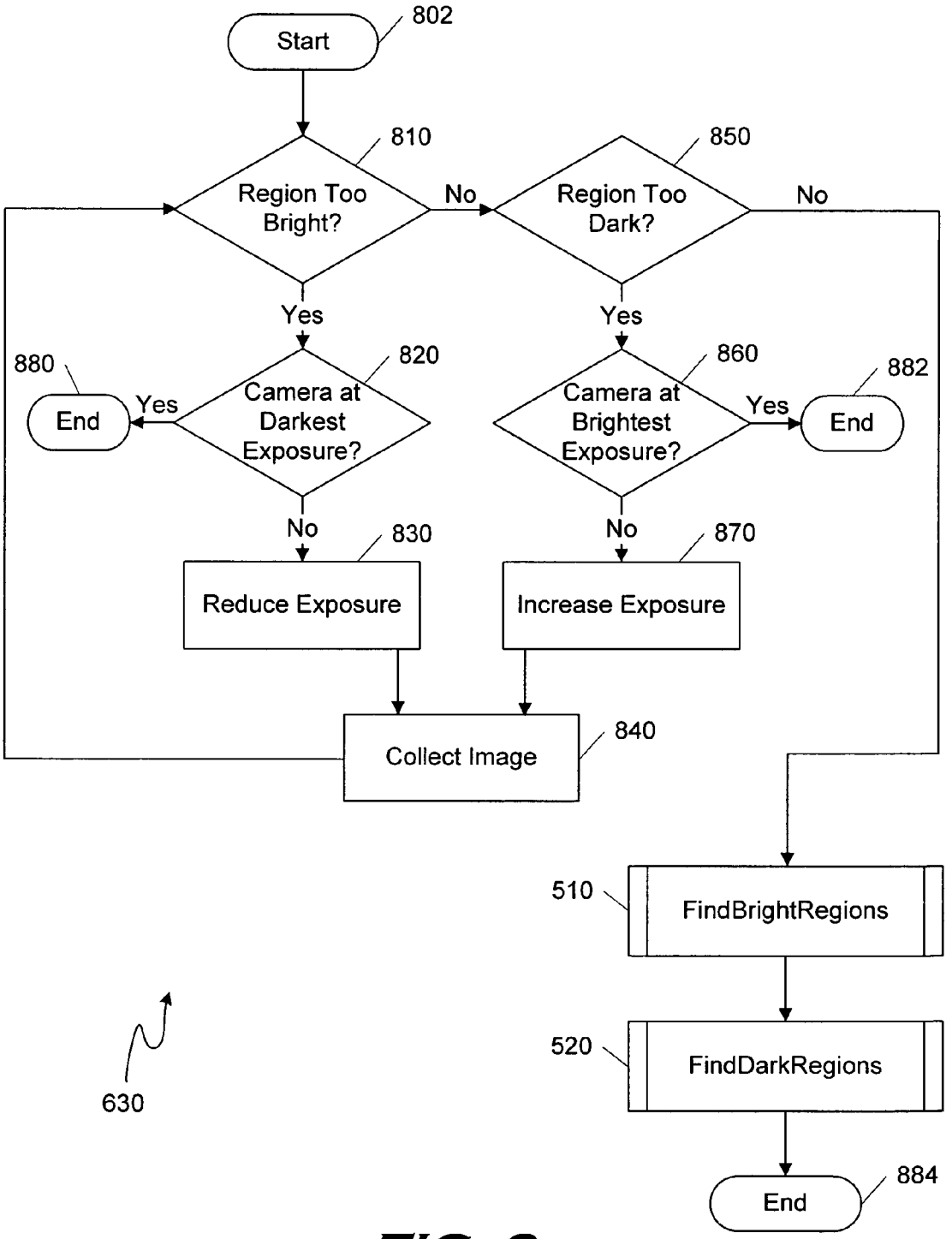
Start
802
Region Too Bright?
810
No
Region Too Dark?
850
No
Yes
Yes
Camera at Darkest Exposure?
820
Yes
End
880
Camera at Brightest Exposure?
860
Yes
End
882
No
No
Reduce Exposure
830
Increase Exposure
870
Collect Image
840
FindBrightRegions
510
FindDarkRegions
520
End
884
630

FIG. 8

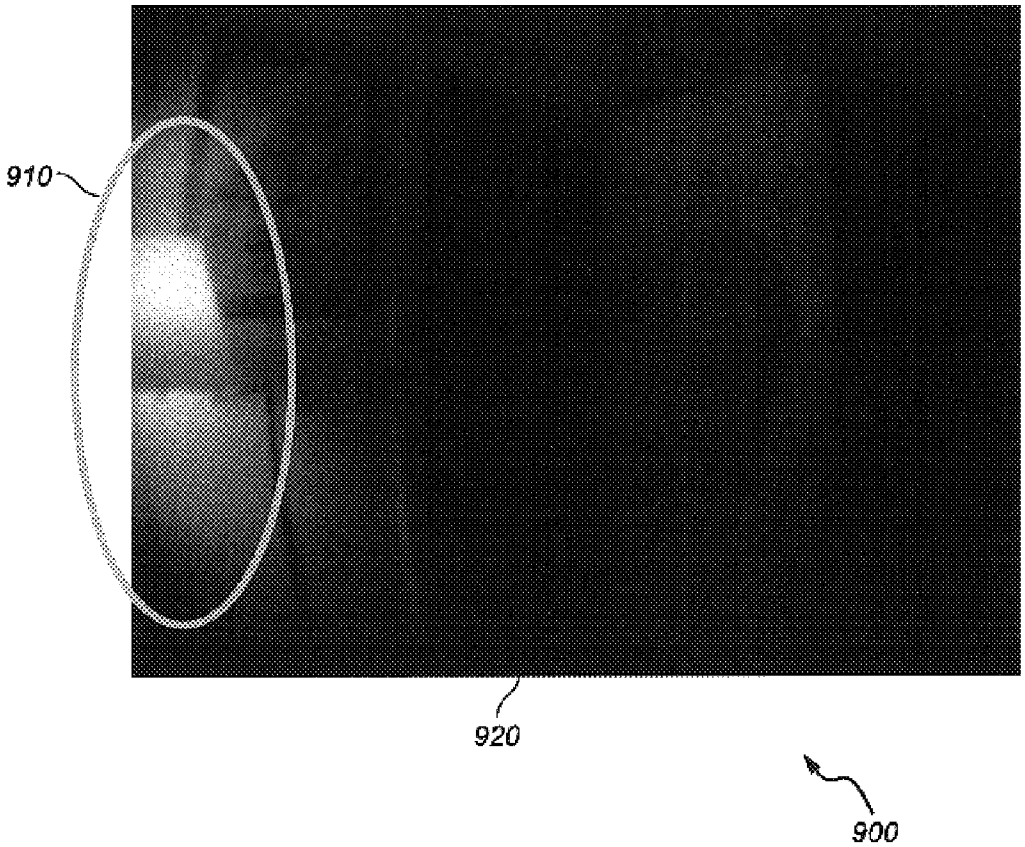

FIG. 9

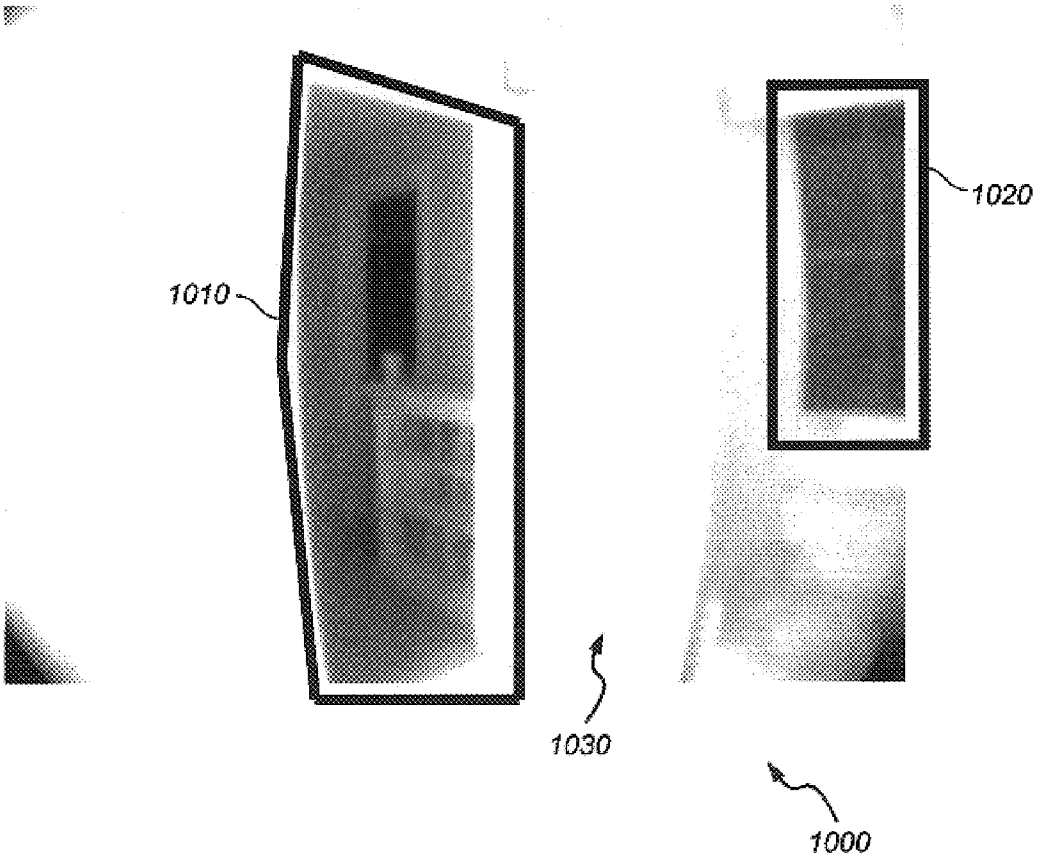

FIG. 10

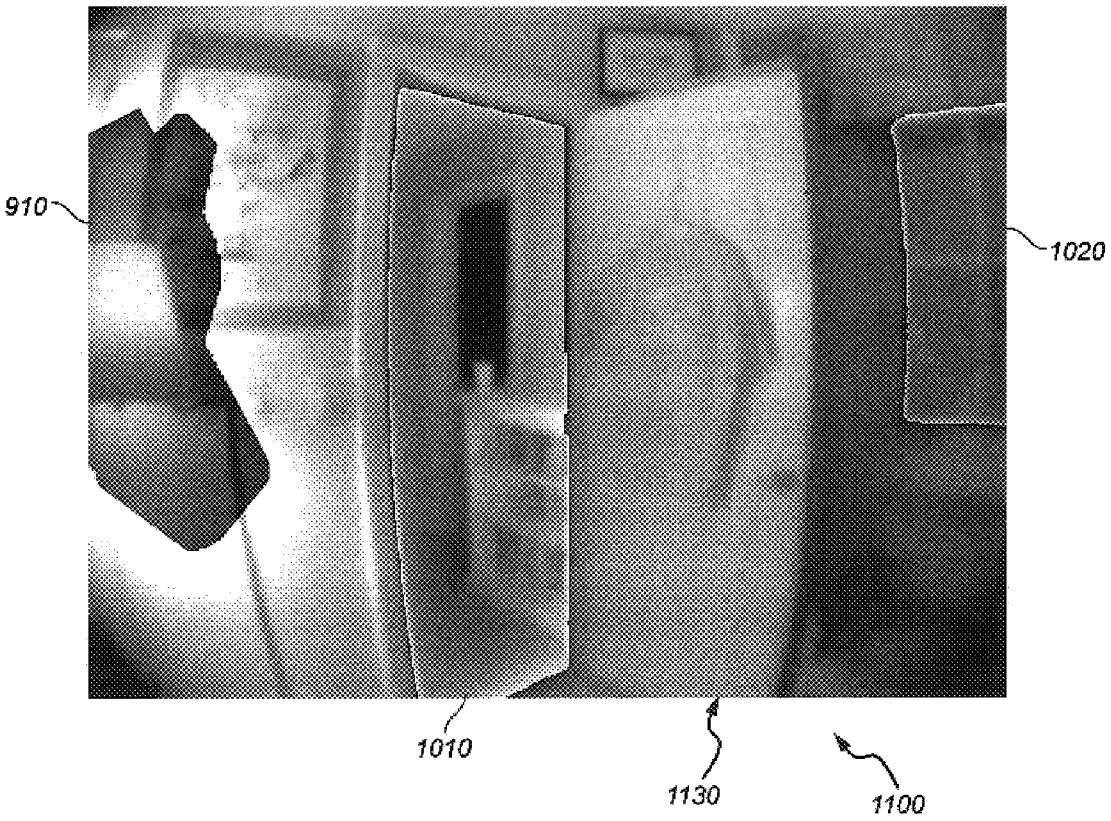

FIG. 11

SYSTEM AND METHOD TO INCREASE EFFECTIVE DYNAMIC RANGE OF IMAGE SENSORS

RELATED APPLICATION

This application claims the benefit under 35 U.S.C. § 119(e) of U.S. Provisional Application No. 60/276,366, filed Mar. 16, 2001 and titled "METHOD FOR RECURSIVE EXPOSURES TO INCREASE EFFECTIVE DYNAMIC RANGE OF CAMERAS," which is hereby incorporated by reference in its entirety. This application is related to U.S. patent application Ser. No. 09/449,177, filed Nov. 24, 1999 and titled "AUTONOMOUS MULTI-PLATFORM ROBOT SYSTEM," which is hereby incorporated by reference in its entirety.

BACKGROUND OF THE INVENTION

1. Field of the Invention

The present invention generally relates to the field of digital image processing. More particularly, the invention relates to providing a system and method for increasing the effective dynamic range of image sensors by combining information from multiple images of the same scene taken at varying exposures via digital image processing.

2. Description of the Related Technology

Many applications exist that require analyzing images to extract information. For example, a mobile robot that uses vision (one form of "machine vision", which is described in greater detail below) will take and analyze a series of digital images looking for objects, both landmarks and obstacles, in order to plan its movements. Both computers and humans analyze images from security systems to assure that everything is in order. Images from satellites are analyzed by looking for objects or patterns or by comparing similar images taken at different times. Typically, greater contrast (i.e., dynamic range) in an image increases the information that can be extracted from the image because edges and other details are better defined. In machine vision, this higher contrast enables simplified edge detection and object localization.

The human vision system has a wide dynamic range and is very good at extracting information from a scene that includes both very bright and very dark areas. However, high contrast often overwhelms the dynamic range of other image sensors, for example digital or analog cameras, such that substantial areas are either saturated or very dark. For a digital image, saturated areas are those that contain pixels at or near the maximum brightness, while dark areas are those that contain pixels at or near the minimum brightness. Typically, saturated areas result from overexposure, while dark areas result from underexposure. It is generally very difficult to effectively analyze saturated and dark areas. High cost cameras typically have a greater dynamic range, but are prohibitively expensive for many applications.

Exposure control is one method to adjust contrast in an image. Current auto exposure systems are generally very accurate. Typical auto exposure systems use reflected-light exposure meters within the camera to detect the level of light and electronically adjust the camera's shutter speed and/or aperture to the optimal exposure setting. Photocells are typically used as exposure meters, with the silicon photodiode being the most common. Image sensors are typically their own exposure meters.

While these light averaging exposure control systems do a good job of selecting the correct nominal exposure, many

images still contain overexposed (saturated) and underexposed (dark) areas. For example, in a photographic image that includes a light, the majority of the image may appear correctly exposed, but the area near the light will often be overexposed (saturated), appearing bright white and without detail.

Some of the digital cameras presently on the market have enhanced auto exposure systems. One such system allows the user to automatically take the same shot at three exposures with one press of the trigger (referred to as bracketing). The user can then choose the best-exposed shot of the three. These systems also allow the user to select the range between the three exposures. However, local bright and dark areas within the image may still make it impossible for any single exposure to effectively capture the entire image. Typically, photographers have used external lights or flash bulbs to improve the picture contrast by increasing the dynamic range of the scene.

Machine vision may refer to the analysis by a system (i.e., machine) of an image or sequence of images to produce useful descriptions of what is imaged in order to accomplish a given task. For example, machine vision may include extracting facial characteristics from an image in order to match a person in an image with a database of facial characteristics, or determining the distance to an object from two stereo images in order for a robot to determine how far it can move forward without hitting the object. Following are examples of applications that may incorporate machine vision processing:

1. Determining a map of an environment in order for a robot to move about autonomously without running into objects;
2. Identifying people in an image to determine who is at a certain location;
3. Tracking an object across multiple images to determine where the object is in the images (e.g., determining where a soccer ball is in the images so that it can be replaced with an advertisement in the shape of the soccer ball in the images);
4. Determining the location, orientation, and size of an object so that it can be automatically manipulated by a machine (e.g., a robotic arm needs to pick up an object from an assembly line, and the object can be one of many types and different places/orientations on a conveyor belt);
5. Tracking an object across multiple images to determine where it is in the environment (e.g., what are the visual characteristics, location, speed, and trajectory of an incoming object to determine whether it is a missile or a plane); and
6. Analyzing medical images in order to find likely areas of disease.

In machine vision applications, one example being robotics, it is advantageous to have the ability to view a whole scene with all areas having sufficient contrast to recognize and analyze the features contained therein. In vision robotics, the robots navigate through the environment by recognizing objects, open space, patterns, walls, and the like. One implementation of robotic vision employs two cameras for stereo vision to determine the distance to objects. Poorly exposed images that lack sufficient dynamic range can lead to the robots either getting lost or failing to adequately locate and avoid objects or dangers such as an open stairwell. Therefore, there is a need in the vision robotics and image sensing and processing technology for increasing the effective dynamic range of image sensors. Such an enhancement

in effective dynamic range would be useful for numerous applications in addition to the robotic application mentioned above.

SUMMARY OF CERTAIN INVENTIVE ASPECTS

The present invention is directed to a system and method of increasing the effective dynamic range of image sensors with computer controllable exposure (either electronic or mechanical). The present invention overcomes limitations with traditional and enhanced automatic exposure systems described above by digitally processing a plurality of images collected from the image sensors with different exposure settings.

One aspect of the invention includes a method of effectively increasing the dynamic range of an image sensor, comprising capturing multiple images of a scene taken at different exposures, searching a selected image of the multiple images for overexposed and underexposed portions based on a pixel value indicative of luminance, analyzing portions in other images of the multiple images taken at lower exposures corresponding spatially to the overexposed portions in the selected image, analyzing portions in other images of the multiple images taken at higher exposures corresponding spatially to the underexposed portions in the selected image, and processing at least one of the analyzed portions with a machine vision application. This additionally comprises the method wherein the image sensor is a digital camera. This additionally comprises the method wherein the portions can be overlapping, non-overlapping, or a combination of overlapping and non-overlapping.

An additional aspect of the invention includes a method of effectively increasing the dynamic range of an image sensor, comprising obtaining an image of a scene, analyzing the image to identify one or more regions that are either too bright or too dark, wherein any one of the regions includes a plurality of pixels, for any identified region that is identified as being too bright, obtaining a reduced exposure image, for any identified region that is identified as being too dark, obtaining an increased exposure image, and processing one or more of the properly exposed regions of the image and one or more properly exposed regions in the reduced and/or increased exposure images. This additionally comprises the method wherein the image sensor is a digital camera. This additionally comprises the method wherein the regions can be overlapping, non-overlapping, or a combination of overlapping and non-overlapping. This additionally comprises the method of obtaining another image at a reduced exposure if the image sensor has a lower exposure setting available. This additionally comprises the method of obtaining another image at an increased exposure if the image sensor has a higher exposure setting available. This additionally comprises the method wherein the obtaining a reduced exposure image and/or obtaining an increased exposure image elements are repeated as long as an average pixel value of any region is not within a selected limit.

This additionally comprises the method of analyzing the properly exposed regions in the reduced and/or increased exposure images to identify one or more subregions that are either too bright or too dark, for any identified subregion that is too bright, obtaining another reduced exposure image, for any identified subregion that is too dark, obtaining another increased exposure image, and processing the properly exposed region and one or more properly exposed subregions in the reduced and/or increased exposure images. This additionally comprises the method wherein the image sensor is mounted on a mobile robot and wherein the method is repeated for a plurality of scenes looking for objects, including both landmarks and obstacles, to plan the movement of the mobile robot. This additionally comprises the method wherein the camera includes a CCD or CMOS sensor.

An additional aspect of the invention includes a computer program storage medium storing instructions that when executed by a processor perform a method of increasing the dynamic range of an image sensor, comprising obtaining a base image of a scene, analyzing the base image to identify one or more regions that are either too bright or too dark, wherein any one of the regions includes a plurality of pixels, for any identified region that is too bright, obtaining a reduced exposure image, for any identified region that is too dark, obtaining an increased exposure image, and processing the base image and one or more properly exposed regions in the reduced and/or increased exposure images. This additionally comprises the storage medium wherein the image sensor is a digital camera. This additionally comprises the storage medium wherein the regions can be overlapping, non-overlapping, or a combination of overlapping and non-overlapping.

An additional aspect of the invention includes an image sensing system for effectively increasing the dynamic range of an image sensor, comprising a means for acquiring an image of a scene a plurality of times with different exposures to obtain a plurality of images, and a means for segmenting the images into a plurality of image regions, wherein each region is indicative of a selected dynamic range, and wherein any one or more of the plurality of image regions are processed with a machine vision application.

This additionally comprises the system wherein the image sensor is a digital camera. This additionally comprises the system wherein the image sensing system includes at least two image sensors offset from each other. This additionally comprises the system wherein the machine vision application utilizes corresponding image segments from the at least two image sensors to determine distance and/or orientation from the camera system to the object or feature being imaged. This additionally comprises the system wherein the imaging sensing system generates a composite image for feature extraction including object identification and localization, edge detection and pattern recognition. This additionally comprises the system wherein the imaging sensing system generates a composite image for feature extraction including object identification and localization, edge detection and pattern recognition. This additionally comprises the system wherein the regions can be overlapping, non-overlapping, or a combination of overlapping and non-overlapping.

An additional aspect of the invention includes a method of effectively increasing the dynamic range of an image sensor, comprising acquiring an image of a scene a plurality of times with different exposures to obtain a plurality of images, segmenting the images into a plurality of image regions, wherein each region is indicative of a selected dynamic range, and processing any one or more of the plurality of image regions with a machine vision application. This additionally comprises the method wherein the image sensor is a digital camera.

An additional aspect of the invention includes an image acquisition system for effectively increasing the dynamic range of an image sensor, comprising a means for acquiring a plurality of images of a scene, each image having a different exposure, and a means for obtaining a plurality of image regions, wherein each region contains portions of a particular image with good dynamic range from the plurality

of images, and wherein any one or more of the plurality of image regions are processed with a machine vision application.

This additionally comprises a means for moving the system from one location to another location so as to acquire images of different scenes. This additionally comprises the system wherein the image sensor is a digital camera. This additionally comprises the system wherein the image sensing system contains at least two image sensors offset from each other. This additionally comprises the system wherein the machine vision application utilizes corresponding image segments from the at least two image sensors to determine distance and/or orientation from the camera system to the object or feature being imaged. This additionally comprises the system wherein the imaging sensing system generates a composite image for feature extraction including object identification and localization, edge detection and pattern recognition. This additionally comprises the system wherein the imaging sensing system generates a composite image for feature extraction including object identification and localization, edge detection and pattern recognition.

An additional aspect of the invention includes a method of effectively increasing the dynamic range of an image sensor, comprising capturing multiple images of a scene taken in different lighting conditions, searching an image of the multiple images for overexposed and underexposed portions based on a pixel value indicative of luminance, reanalyzing the overexposed portions and the underexposed portions in the selected image corresponding to a spatially related portion in other images of the multiple images taken in different lighting conditions, and processing at least one of the reanalyzed portions with a machine vision application. This additionally comprises the method wherein the image sensor is a digital camera. This additionally comprises the method wherein the portions can be overlapping, non-overlapping, or a combination of overlapping and non-overlapping. This additionally comprises the method wherein the different light conditions include one or more flashes of light.

An additional aspect of the invention includes an image sensing system for effectively increasing the dynamic range of one or more image sensors, comprising a means for acquiring an image of a scene a plurality of times under different lighting conditions so as to obtain a plurality of images, and a means for segmenting the images into a plurality of image regions, wherein each region is indicative of a selected dynamic range, and wherein any one or more of the plurality of image regions are processed with a machine vision application.

This additionally comprises the system wherein the one or more image sensor is one or more digital camera. This additionally comprises the system wherein the different lighting conditions include the use of one or more flashes of light. This additionally comprises the system wherein the image sensing system contains at least two image sensors offset from each other. This additionally comprises the system wherein the machine vision application utilizes corresponding image segments from the at least two image sensors to determine distance and/or orientation from the camera system to the object or feature being imaged. This additionally comprises the system wherein the imaging sensing system generates a composite image for feature extraction including object identification and localization, edge detection and pattern recognition. This additionally comprises the system wherein the imaging sensing system generates a composite image for feature extraction including object identification and localization, edge detection and pattern recognition.

BRIEF DESCRIPTION OF THE DRAWINGS

The above and other aspects, features and advantages of the invention will be better understood by referring to the following detailed description, which should be read in conjunction with the accompanying drawings. These drawings and the associated description are provided to illustrate certain embodiments of the invention, and not to limit the scope of the invention.

FIG. **1**A is a diagram of one embodiment of an image sensing and processing system utilizing a single image sensor.

FIG. **1**B is a diagram of one embodiment of the image sensing and processing system utilizing multiple image sensors mounted on a mobile robotic device.

FIG. **2** is a digital image of a scene, taken at the nominal exposure chosen by an automatic exposure system of the image sensor, for use as a base image.

FIG. **3** is a system diagram of the modules in one embodiment of the image sensing and processing system.

FIG. **4** is a system diagram of the modules in a further embodiment of the image sensing and processing system.

FIG. **5** is a flowchart of an embodiment of the stages of a recursive exposure process in the image sensing and processing system.

FIG. **6** is a flowchart of an embodiment of the stages of the FindBrightRegions process shown in FIG. **5**.

FIG. **7** is a flowchart of an embodiment of the stages of the FindDarkRegions process shown in FIG. **5**.

FIG. **8** is a flowchart of one embodiment of the stages of the ProcessRegion process shown in FIGS. **6** and **7**.

FIG. **9** is a digital image of the base image scene shown in FIG. **2**, but taken at a lower level of exposure.

FIG. **10** is a digital image of the base image scene shown in FIG. **2**, but taken at a higher level of exposure.

FIG. **11** is a composite image spliced together from the images of FIGS. **2**, **9** and **10**, using the best-exposed portions of each of the images.

DETAILED DESCRIPTION OF CERTAIN EMBODIMENTS

The following detailed description of certain embodiments presents various descriptions of specific embodiments of the present invention. However, the present invention can be embodied in a multitude of different ways as defined and covered by the claims. In this description, reference is made to the drawings wherein like parts are designated with like numerals throughout.

An embodiment of the present invention provides a mechanism for increasing the effective dynamic range of an image sensor by combining information from multiple images of the same scene, with the different images taken at different exposures. This embodiment includes one or more image sensors, for example a digital camera, that can remain effectively stationary long enough to obtain multiple images of the same scene. Such a digital imaging process would not normally take a long time, as computers can typically complete the process in a fraction of second. Therefore, in various embodiments, the image sensor can be portable and rest on the ground, on a tripod or be integrated in a mobile robot. Other embodiments may provide other configurations of the image sensor. The initial exposure setting may be

computer controlled. However, an auto exposure system may also be used for the base, i.e., first, image. The exposure control may be either electronic or mechanical, and may utilize a computer controllable iris.

Certain embodiments also include a computer to perform digital image processing on the images captured by the image sensor. The image sensor and computer communicate for the exchange of data, for example by commonly accessible computer memory or via a network connection. In one embodiment, the computer may consist of a printed circuit board with the necessary components within the image sensor housing. In the case of mobile robotics, a robot typically includes at least a computer, a drive system and an image sensor, for example a camera, with a mechanism for exposure control.

In one embodiment, the process begins with the image sensor system taking a photographic image of a scene, referred to as a base image. The base image is searched for areas that are saturated or nearly saturated. For each area that is saturated or nearly saturated, additional images of the same scene are collected at successively lower (e.g., darker) exposures until the average pixel value of the previously saturated area is near the middle of the pixel value range. For each area that is black (i.e., underexposed) or nearly black, additional images are collected at successively higher (e.g., lighter) exposures until the average pixel value of the previously black area is near the middle of the pixel value range.

Recursive exposure is a way to further segment a poorly exposed region of an image. Additional images at various exposures need not have good contrast for the entire region. Portions of multiple images may be used to provide a series of image segments that together cover an entire region of interest.

In another embodiment, instead of recursively adjusting the exposure and taking as many photographs as necessary to refine the image, the computer may direct the image sensor to take a predetermined number of pictures at different exposures simultaneously or sequentially. In this embodiment, instead of optimizing the exposure of each region, the computer selects the best exposure for each region from the series of images. The computer-controlled image sensor may include a specialized image sensing mechanism to automatically take the number of pictures at different exposures.

In an example where the image is taken on a bright day from the outside looking inside through a doorway and into a dark room, a typical automatic exposure image sensing system selects the appropriate exposure for the outside of the building. However, in this situation, objects and/or features inside the room appear black (i.e., underexposed). In one embodiment, the computer image processing system analyzes the image and determines that everything within the doorway is dark. The picture is retaken at a higher exposure and the doorway portion of the image is reanalyzed. If the average pixel value of the image is still below a predetermined threshold, the computer continue to direct the image sensing system to take additional images at different higher exposures until the area within the doorway is adequately exposed or the image sensor has reached a maximum exposure setting.

From such recursive exposure techniques, a series of images are obtained that collectively contain sufficient contrast for each region of the image. There are various embodiments for the image segmentation techniques. For example, in one embodiment, the regions are tracked via the particular pixels that are properly and adequately exposed in each image. Alternatively, many possible shapes may be used to demarcate the region, for example rectangles, polygons, ellipses, splines (i.e., a smooth curve that passes through two or more points, often generated with mathematical formulas), and the like. In this embodiment, the properly exposed segment of each image can then be analyzed by the particular application. In an embodiment utilizing machine vision, the segmented regions may overlap or even contain voids that are not properly exposed in any image. In this way, a robot uses all the information it can retrieve, but due to the statistical nature of the image processing algorithms, it can work without 100% coverage of the given scene.

In an alternative embodiment, the system utilizes multiple image sensors, for example digital cameras, as is required for certain applications such as stereo vision. The exposure analysis can be performed independently for the images captured by each camera, or the exposures can be chosen to be the same for corresponding regions in images from different cameras.

In a further embodiment, the contrast may be varied between images using lights or a flash bulb. Image processing applications are typically not limited to the visual light spectrum. For example, cameras using complementary metal oxide semiconductor (CMOS) devices to capture images can operate in the infrared light region, and thus exposure settings in the infrared range can be used. As infrared light cannot be seen by the human eye, the camera system can have lights or flashes that are therefore invisible to the human eye. Other cameras are available that use charge-coupled devices (CCD) to capture images.

In another embodiment, not all the photographs need to be taken of the identical scene. This situation may arise when either the image sensor or the scene cannot remain stationary, such that each image is of a slightly different scene. This embodiment requires performing significantly more image processing as the computer must correlate the objects and features in each picture since they are not in the same position in the images. There are correlation techniques known in the technology, such as optical flow for matching the objects in images. In yet another embodiment, analog cameras are used as the image sensor, requiring that complete images be taken at different exposures and scanned into a computer in a digital format prior to performing the exposure analysis techniques.

In an embodiment utilizing application of machine vision, image processing algorithms executing on the computer analyze each subregion separately, or corresponding subregions in the case of multiple image sensor applications. In an embodiment in which a human analyzes the images, the computer algorithms may splice the properly exposed regions of multiple images into a single image. Although such a spliced image is likely to be disjoint, the various regions of the image are properly exposed so that objects and/or features in the entire image may be processed. The properly exposed regions can be overlapping, non-overlapping, of a combination of overlapping and non-overlapping.

In an embodiment utilizing stereo vision, for example in vision based robotics, the computer matches objects and/or features in images from one of its image sensors to corresponding objects and/or features in images from another image sensor. The relative location of the objects and/or features in each of the images may be used to determine the robot's distance and orientation relative to the object and/or feature. In this embodiment, a properly exposed region is one in which an object and/or feature has sufficient contrast so that it can be matched between the images of both stereo image sensors.

FIG. **1**A is a diagram of one embodiment of an image sensing and processing system utilizing a single image sensor **101**. In this embodiment, the image sensor **101** is connected to a computer **102** via a cable **104**. Although any image sensor capturing images in a digital format may be used, a type of image sensor presently in widespread use is a digital camera. Multiple image sensors **101** may be used for applications such as stereo vision. The cable **104** shown in FIG. **1**A could be one or more of many types of interface cables, for example a serial interface cable (e.g., RS-232, EIA-232, or RS-422), a parallel interface cable, a USB (Universal Serial Bus) interface cable, a network interface cable (e.g., Ethernet or TCP/IP), or any other cable capable of connecting multiple devices to allow data communication between the devices. In other embodiments, an analog camera image sensor **101** is used to capture images using traditional photographic film format. The photographic film images are scanned into a digital format and stored by the computer **102**. However, this approach would be more cumbersome and time consuming than using image sensors that capture images directly in a digital format.

The computer **102** shown in the embodiment of FIG. **1**A is a desktop personal computer (PC), but in other embodiments the computer **102** could also be, for example, a dedicated printed circuit board or a single integrated circuit having only the hardware required for the image processing. In further embodiments, the image sensor **101** and the computer **102** can be integrated into a single machine or unit, thereby potentially eliminating the presence of the cable **104** connecting them. In still further embodiments, a wireless link may be substituted for the cable **104** shown in FIG. **1**A.

FIG. **1**A shows the image sensor **101**, for example a camera, being mounted on a tripod **103**, which is widely used in the photographic technology for securing and minimizing movement of the camera **101** while an image is captured. The use of the tripod **103** is beneficial to ensure that the images are substantially identical except for the varying exposures. FIG. **1**A additionally shows an example of a scene containing objects **105** that may be in a scene, for example a lamp and a table in this example. The typical subjects for multiple image processing are images having stationary objects **105** where the scenes are captured within a relatively short time period. However, the image processing techniques described herein may be applied to photographs taken at different times, having the added benefit of lighting variations in the different images. The recursive exposure technique may also be applied to dynamic scenes having objects and/or features that are in different locations in the multiple images. In this case, additional processing is required to correlate the objects that have moved between images.

FIG. **1**B is a diagram of one embodiment of the image sensing and processing system utilizing multiple image sensors **101** mounted on a mobile robotic device **110**. FIG. **1**B shows a robot **110** having two image sensors **101**, but other embodiments are contemplated which have only a single image sensor **101** (as shown in FIG. **1**A) or more than two image sensors **101** (configuration not shown). The two image sensors **101** shown in FIG. **1**B are capable of taking multiple images of the objects **105** of the scene at approximately the same time or at different times and with the same or different exposure settings.

In one embodiment as shown in FIG. **1**B, one or more cameras **101** can be mounted on a mobile robot **110**, in which case the image processing method is repeated for a plurality of scenes looking for objects **105**, including both landmark and obstacles, to plan the robot's **110** movement. Mobile robots **110** are described in Applicant's co-pending patent application, U.S. patent application Ser. No. 09/449,177, which is hereby incorporated by reference in its entirety.

FIG. **2** is a digital image of a scene, taken at the nominal exposure chosen by an automatic exposure system of the image sensor **101**, for use as a base image **200**. Many areas of the base image **200** have the correct exposure and are clear in the photograph, such as, for example, the shirt hanging on the door **210**. In the base image **200** shown in FIG. **2**, it is also possible to see the design on the shirt and the print on the window shade. However, the area behind the lamp **220** is saturated (i.e., overly bright or overexposed), while the room behind the door **230** and the window **240** are overly dark (i.e., underexposed). In the base image **200** example shown in FIG. **2**, the area behind the lamp **220** is the only overly bright area.

FIG. **3** is a system diagram of the modules **300** in one embodiment of the image sensing and processing system. In this embodiment, an acquisition of a plurality of images module **310** is included. The module **310** is in data communication with an image region segmentation module **320**. The module **320** is in further data communication with a machine vision processing module **330**. The data communication may take many forms, including, for example, commonly accessible computer memory or a network connection, to name just a few. For more information on machine vision processing algorithms, see, for example, B. K. P. Horn, "Robot Vision," MIT Press and McGraw-Hill (1986), Klette, Schluns & Koschan, "Computer Vision," Springer-Verlag Singapore Pte. Limited (1998), Duda & Hart, "Pattern Classification and Scene Analysis," John Wiley & Sons (1973), and S. E. Umbaugh, "Computer Vision and Image Processing," Prentice Hall (1998), all of which are hereby incorporated by reference in their entirety.

FIG. **4** is a system diagram of the modules **400** in a further embodiment of the image sensing and processing system. In this embodiment, the acquisition of a plurality of images module **310** (see FIG. **3**) is included. The module **310** is in data communication with an image region module **410**. The module **410** is in further data communication with a machine vision processing module **330** (see FIG. **3**). The module **330** is in further data communication with a movement module **420**. The movement module **420** directs the movement of the system from one location to another location so as to acquire images of different scenes. The data communication may take many forms, as described above in relation to FIG. **3**.

FIG. **5** is a flowchart of an embodiment of the stages of a recursive exposure process **500** in the image sensing and processing system. As shown in FIG. **5**, the recursive exposure process **500** begins at a start stage **502**. After the start stage **502**, the recursive exposure process **500** proceeds to a FindBrightRegions process **510**. The FindBrightRegions process **510**, which is described in greater detail below in relation to FIG. **6**, is executed for overly bright (saturated) regions **220** of the base image **200**. After the FindBrightRegions process **510**, the recursive exposure process **500** proceeds to a FindDarkRegions process **520**. The FindDarkRegions process **520**, which is described in greater detail below in relation to FIG. **7**, is executed for overly dark (underexposed) regions **230**, **240** of the base image **200**. After the FindDarkRegions process **520**, the recursive exposure process **500** proceeds to a stage for sending all regions to image processing routines **530**. An optical flow analysis is an example of such an image processing routine. For more information on optical flow analysis, see, for example, F.

Bergholm and S. Carlsson, "A "theory" of optical flow", Computer Visions, Graphics, and Image Processing: Image Understanding, vol. 53, pp. 171–188, March 1992, and also see S. Baker and T. Kanade, "Super Resolution Optical Flow", tech. report CMU-RI-TR-99-36, Robotics Institute, Carnegie Mellon University, October 1999, both of which are hereby incorporated by reference in their entirety. After stage **530**, the recursive exposure process **500** terminates at an end stage **540**.

FIG. **6** is a flowchart of an embodiment of the stages of the FindBrightRegions process **510** shown in FIG. **5**. An overly bright region is one in which a group of pixels of sufficient size has values greater than a specified threshold. An example of such an overly bright region is a region in which every pixel is saturated. As shown in FIG. **6**, the FindBrightRegions process **510** begins at a start stage **602**. After the start stage **602**, the FindBrightRegions process **510** proceeds to a decision stage **610**. If it is determined at the decision stage **610** that another group of too bright pixels is not present, the FindBrightRegions process **510** terminates at an end stage **640**. If, however, it is determined at the decision stage **610** that another group of too bright pixels is present, the FindBrightRegions process **510** proceeds to a create new region containing saturated pixels stage **620**. Regions may, for example, be represented by polygons, arrays of pixels (compressed or uncompressed), or chain codes. After stage **620**, the FindBrightRegions process **510** proceeds to a ProcessRegion process **630**, which is described in greater detail below in relation to FIG. **8**.

FIG. **7** is a flowchart of an embodiment of the stages of the FindDarkRegions process **520** shown in FIG. **5**. An overly dark region is one in which the average pixel value is less than a specified threshold. One example would be a region in which every pixel has zero intensity, i.e., is black. As shown in FIG. **7**, the FindDarkRegions process **520** begins at a start stage **702**. After the start stage **702**, the FindDarkRegions process **520** proceeds to a decision stage **710**. If it is determined at the decision stage **710** that another group of too dark pixels is not present, the FindDarkRegions process **520** terminates at an end stage **730**. If, however, it is determined at the decision stage **710** that another group of too dark pixels is present, the FindDarkRegions process **520** proceeds to a stage for creating a new region containing dark pixels **720**. After stage **720**, the FindDarkRegions process **520** proceeds to a ProcessRegion process **630**, which is described in greater detail below in relation to FIG. **8**. Referring back to the exemplary base image **200** in FIG. **2**, the window **240** and the area through the door **230** are examples of dark regions that are reprocessed using the ProcessRegion process **630**.

FIG. **8** is a flowchart of one embodiment of the stages of the ProcessRegion process **630** shown in FIGS. **6** and **7**. In this embodiment, each region that is too bright or too dark is analyzed and new images are generated at different exposures using the ProcessRegion process **630** shown in FIG. **8**. As shown in FIG. **8**, the ProcessRegion process **630** begins at a start stage **802**. After the start stage **802**, the ProcessRegion process **630** proceeds to a decision stage **810**. If it is determined at the decision stage **810** that the corresponding region in the new image is too bright, the ProcessRegion process **630** proceeds to a decision stage **820**. If it is determined at the decision stage **820** that the image sensor **101**, for example, a camera, is at the darkest (i.e., lowest) exposure, the ProcessRegion process **630** terminates at an end stage **880**. If, however, it is determined at the decision stage **820** that the image sensor **101** is not at the lowest exposure, the ProcessRegion process **630** proceeds to a reduce exposure stage **830** to lower the exposure setting of the image sensor **101**.

There are various algorithms that may be used to determine the amount to reduce the exposure. For example, in one embodiment, a two-dimensional table lookup is used for which the inputs are the average pixel value in the current region and the current exposure setting. The output of the table lookup in this embodiment is the new exposure setting. In an alternative embodiment, the new exposure setting is calculated such that the ratio of the new exposure setting to the previous exposure setting is substantially equal to the ratio of the desired average pixel value to the current average pixel value. In certain embodiments, the exposure of the image may be enhanced by various techniques, such as, for example, altering the time the image sensor **101** receives light, altering the size of the image sensor **101** lens opening, altering the brightness (e.g., black) setting, altering the contrast (e.g., gain) setting, using a steady light or flash to illuminate the scene, or other pre-capture or post-capture exposure techniques.

After the stage **830**, the ProcessRegion process **630** proceeds to the collect image stage **840**, which in one embodiment includes the image sensor **101** capturing a new image in a manner similar to the capture of the previous image but with a varied exposure setting. After the stage **840**, the ProcessRegion process **630** proceeds to the decision stage **810**. After the camera's exposure setting is reduced at stage **830** and the new image is collected at stage **840**, the process is repeated until either the average pixel value is within acceptable limits (as described above in relation to decision stages **810** and **850**) or no more compensation is possible because the camera exposure setting is at its minimum or maximum value (as described above in relation to decision stages **820** and **860**). In those cases in which the end result of this repeated process is that the average pixel value is within acceptable limits, the process is recursively repeated for this region in the image (as shown by the recursive execution of stages **510** and **520** in FIG. **8**, which are described above in relation to FIGS. **6** and **7**). In other words, the region is checked for groups of too bright pixels by the FindBrightRegions process **510** and groups of too dark pixels by the FindDarkRegions process **520** using the same processes that previously checked the base image **200**. Although it is possible that each pixel could have a unique ideal exposure, most images can be optimized with a small number of exposures. In another embodiment, multiple images of the scene are collected at a wide range of different exposures and saved prior to the image processing, which occurs after capture of the images. In this embodiment, the image processing is as described above except that instead of collecting the image at stage **840**, the image most closely corresponding to the desired exposure is retrieved and processed.

If, however, at the decision stage **810** it is determined that the region is not too bright, the ProcessRegion process **630** proceeds to a decision stage **850**. If it is determined at the decision stage **850** that the region is too dark, the ProcessRegion process **630** proceeds to a decision stage **860**. If it is determined at the decision stage **860** that the image sensor is at the brightest exposure, the ProcessRegion process **630** terminates at an end stage **882**. If, however, it is determined at decision stage **860** that the image sensor is not at the brightest exposure, the ProcessRegion process **630** proceeds to an increase exposure stage **870**.

Various algorithms may be used to determine the amount to increase the exposure. In one embodiment, a two-dimen-

sional table lookup is used for which the inputs are the average pixel value in the current region and the current exposure setting. The output of the table lookup in this embodiment is a new exposure setting. In an alternative embodiment, the new exposure setting is calculated such that the ratio of the new exposure setting to the previous exposure setting is substantially equal to the ratio of the desired average pixel value to the current average pixel value.

After the stage **870**, the ProcessRegion process **630** proceeds to the collect image stage **840**. After the stage **840**, the ProcessRegion process **630** proceeds to the decision stage **810** as described above.

If, however, at decision stage **850**, it is determined that the region is not too dark, the ProcessRegion process **630** proceeds to the FindBrightRegions process **510** as described above in relation to FIG. **6**. After the FindBrightRegions process **510**, the ProcessRegion process **630** proceeds to the FindDarkRegions process **520** as described above in relation to FIG. **7**. After the FindDarkRegions process **520**, the ProcessRegion process **630** terminates at an end stage **884**. End stages **880**, **882**, **884** in FIG. **8** represent the same end processing instructions, but are drawn as three separate stages only for simplifying the drawing of FIG. **8**.

FIG. **9** is a digital image **900** of the base image **200** scene shown in FIG. **2**, but taken at a lower level of exposure. The overly bright area **220** from the base image **200** (see FIG. **2**) is properly exposed in the image **900** as shown by an area **910**. While the remainder of a lower exposure area **920** of the image **900** is not be processed, inspection of FIG. **9** illustrates that this area **920** of the image **900** is underexposed and therefore too dark for the image processing to recognize most objects and/or features.

FIG. **10** is a digital image **1000** of the base image **200** scene shown in FIG. **2**, but taken at a higher level of exposure. The overly dark areas **230**, **240** from the base image **200** are properly exposed in the new image **1000** as shown by areas **1010**, **1020**, respectively. However, inspection of FIG. **10** illustrates that most of the remaining area **1030** of the image **1000** is overexposed and therefore too light for the image processing to recognize most objects and/or features.

FIG. **11** is a composite image **1100**, spliced together from the images shown in FIGS. **2**, **9** and **10**, using the best-exposed portions of each of the images **200**, **900** and **1000**. In one embodiment, having processed the overly bright and overly dark regions, the images are ready for the application dependent image processing. In embodiments in which the application utilizes machine vision, the computer analysis generally occurs independently on the properly exposed regions of each image. While there are embodiments of the invention which do not require a composite image, FIG. **11** shows the effective image if such a composite image **1100** were generated. In this embodiment, using the three exposed images **200**, **900** and **1000**, the majority area **1130** of the composite image **1100** is from the base image **200**. The overly bright region **220** in the base image **200** is replaced by the properly exposed region **910** of the underexposed image **900** shown in FIG. **9**. The overly dark regions **230**, **240** of the base image **200** are replaced by the properly exposed regions **1010**, **1020**, respectively, of the overexposed image **1000** shown in FIG. **10**. In one embodiment, the composite image **1100** may be disjoint as it uses just three exposures and is not subject to further image processing, but as FIG. **11** illustrates, much more detail can be seen in all areas of the composite image **1100** than in the initial base image **200**.

In further embodiments, additional exposures are captured that create subregions similar to a ring shape in which progressively larger rings are displayed for a series of images. In such embodiments, the brightness transitions are smoother between regions. In still further embodiments, dynamic scenes or instances in which the image sensor is allowed to move require significantly more image processing, but may be analyzed and processed in a manner similar to that described above. In these embodiments, the region shapes may vary slightly between the different images.

While the above detailed description has shown, described, and pointed out novel features of the invention as applied to various embodiments, it will be understood that various omissions, substitutions, and changes in the form and details of the device or process illustrated may be made by those skilled in the art without departing from the intent of the invention. The scope of the invention is indicated by the appended claims rather than by the foregoing description. All changes that come within the meaning and range of equivalency of the claims are to be embraced within their scope.

What is claimed is:

1. A method of effectively increasing the dynamic range of a machine vision application, the method comprising:

capturing multiple images of a scene taken at different exposures and with multiple image sensors;

searching a selected image of the multiple images for overexposed and underexposed portions based on a pixel value indicative of luminance;

analyzing portions in other images of the multiple images taken at lower exposures corresponding spatially to the overexposed portions in the selected image;

analyzing portions in other images of the multiple images taken at higher exposures corresponding spatially to the underexposed portions in the selected image; and

applying feature extraction to at least one of the analyzed portions for distance determination based on relative locations of the features within images associated with the multiple image sensors.

2. The method of claim **1**, wherein an image sensor is used to capture the multiple images.

3. The method of claim **2**, wherein the image sensor is a digital camera.

4. The method of claim **1**, wherein the portions can be overlapping, noncontiguous, or a combination of overlapping and noncontiguous.

5. The method of claim **1**, wherein the capturing of multiple images occurs substantially simultaneously.

6. The method of claim **1**, additionally comprising generating a composite image for feature extraction based on the analyzed portions that are determined to be properly exposed.

7. The method of claim **1**, additionally comprising applying feature extraction to at least a portion of the selected image for distance determination based on relative locations of the features within images associated with the multiple image sensors.

8. A method of effectively increasing the dynamic range of a machine vision application, the method comprising:

obtaining an image of a scene with multiple image sensors;

analyzing the image to identify one or more regions that are either too bright or too dark, wherein any one of the regions includes a plurality of pixels;

for any identified region that is identified as being too bright, obtaining a reduced exposure image;

for any identified region that is identified as being too dark, obtaining an increased exposure image; and

analyzing one or more of the properly exposed regions of the image or one or more properly exposed regions in the reduced and/or increased exposure images, wherein analyzing comprises feature extraction for distance determination based on relative locations of the features within images associated with the multiple image sensors.

9. The method defined in claim **8**, wherein an image sensor is used to obtain the images.

10. The method defined in claim **9**, wherein the camera includes a CCD or CMOS sensor.

11. The method of claim **9**, wherein the image sensor is a digital camera.

12. The method defined in claim **8**, wherein the regions can be overlapping, noncontiguous, or a combination of overlapping and noncontiguous.

13. The method defined in claim **8**, additionally comprising obtaining another image at a reduced exposure if the image sensor has a lower exposure setting available.

14. The method defined in claim **8**, additionally comprising obtaining another image at an increased exposure if the image sensor has a higher exposure setting available.

15. The method defined in claim **8**, wherein the obtaining a reduced exposure image and/or obtaining an increased exposure image are repeated as long as an average pixel value of any region is not within a selected limit.

16. The method defined in claim **8**, additionally comprising:

analyzing the properly exposed regions in the reduced and/or increased exposure images to identify one or more subregions that are either too bright or too dark;

for any identified subregion that is too bright, obtaining another reduced exposure image;

for any identified subregion that is too dark, obtaining another increased exposure image; and

processing the properly exposed region and one or more properly exposed subregions in the reduced and/or increased exposure images.

17. The method defined in claim **8**, wherein the image sensor is mounted on a mobile robot and wherein the method is repeated for a plurality of scenes looking for objects, including both landmarks and obstacles, to plan the movement of the mobile robot.

18. The method of claim **8**, wherein the obtaining of the image, the obtaining of the reduced exposure image, and the obtaining of the increased exposure image occurs substantially simultaneously.

19. The method defined in claim **8**, additionally comprising generating a composite image for feature extraction from the one or more properly exposed regions of the image and the one or more properly exposed regions in the reduced and/or increased exposure images.

20. A computer program storage medium storing instructions that when executed by a processor perform a method of increasing the dynamic range of a machine vision application, the method comprising:

obtaining a base image of a scene with multiple image sensors;

analyzing the base image to identify one or more regions that are either too bright or too dark, wherein any one of the regions includes a plurality of pixels;

for any identified region that is too bright, obtaining a reduced exposure image;

for any identified region that is too dark, obtaining an increased exposure image; and

analyzing the base image and one or more properly exposed regions in the reduced and/or increased exposure images, wherein analyzing comprises feature extraction for distance determination based on relative locations of features within images associated with the multiple image sensors.

21. The storage medium of claim **20**, wherein an image sensor is used to obtain the base image, reduced exposure image, or increased exposure image.

22. The storage medium of claim **21**, wherein the image sensor is a digital camera.

23. The storage medium of claim **20**, wherein the regions can be overlapping, noncontiguous, or a combination of overlapping and noncontiguous.

24. The storage medium of claim **20**, wherein the obtaining of the base image, the obtaining of the reduced exposure image, and the obtaining of the increased exposure image occurs substantially simultaneously.

25. The storage medium of claim **20**, additionally comprising generating a composite image for feature extraction from the base image and the one or more properly exposed regions in the reduced and/or increased exposure images.

26. The method of claim **20**, wherein the analyzing comprises feature extraction for object identification.

27. An image sensing system for effectively increasing the dynamic range of a machine vision application, the system comprising:

means for acquiring an image of a scene a plurality of times with different exposures using multiple image sensors to obtain a plurality of images;

means for segmenting the images into a plurality of image regions, wherein each region is indicative of a selected dynamic range; and

means for analyzing one or more of the plurality of image regions for feature extraction including distance determination based on relative locations of the features within images associated with the multiple image sensors.

28. The system of claim **27**, wherein an image sensor is used to acquire the image.

29. The system of claim **28**, wherein the image sensor is a digital camera.

30. The system of claim **27**, wherein the image sensing system includes at least two image sensors offset from each other.

31. The system of claim **30**, wherein the machine vision application utilizes corresponding image segments from the at least two image sensors to determine distance and/or orientation from the camera system to the object or feature being imaged.

32. The system of claim **31**, wherein the imaging sensing system generates a composite image for feature extraction including object identification and localization, edge detection and pattern recognition.

33. The system of claim **27**, wherein the imaging sensing system generates a composite image for feature extraction including object identification and localization, edge detection and pattern recognition.

34. The system of claim **27**, wherein the regions can be overlapping, noncontiguous, or a combination of overlapping and noncontiguous.

35. The system of claim **27**, wherein the acquiring of the image of the scene a plurality of times occurs substantially simultaneously.

36. A method of effectively increasing the dynamic range of a machine vision application, the method comprising:

acquiring an image of a scene a plurality of times with different exposures using multiple image sensors to obtain a plurality of images;

segmenting the images into a plurality of image regions, wherein each region is indicative of a selected dynamic range; and

analyzing any one or more of the plurality of image regions, wherein analyzing comprises feature extraction for distance determination based on relative locations of features within images associated with the multiple image sensors.

37. The method of claim **36**, wherein an image sensor is used to acquire the image.

38. The method of claim **37**, wherein the image sensor is a digital camera.

39. The method of claim **36**, wherein the acquiring of the image of the scene a plurality of times occurs substantially simultaneously.

40. The method of claim **15**, additionally comprising generating a composite image for feature extraction based on the image regions being within a selected dynamic range.

41. The method of claim **36**, wherein the analyzing comprises feature extraction for object identification.

42. An image acquisition system for effectively increasing the dynamic range of a machine vision application, the system comprising:

means for acquiring a plurality of images of a scene with multiple image sensors, each image having a different exposure;

means for obtaining a plurality of image regions, wherein each region contains portions of a particular image with good dynamic range from the plurality of images; and

means for analyzing one or more of the plurality of image regions for feature extraction including distance determination based on relative locations of the features within images associated with the multiple image sensors.

43. The system of claim **42**, further comprising means for moving the system from one location to another location so as to acquire images of different scenes.

44. The system of claim **42**, wherein an image sensor is used to acquire the plurality of images.

45. The system of claim **44**, wherein the image sensor is a digital camera.

46. The system of claim **42**, wherein the image sensing system contains at least two image sensors offset from each other.

47. The system of claim **46**, wherein the machine vision application utilizes corresponding image segments from the at least two image sensors to determine distance and/or orientation from the camera system to the object or feature being imaged.

48. The system of claim **42**, wherein the imaging sensing system generates a composite image for feature extraction including object identification and localization, edge detection and pattern recognition.

49. The system of claim **47**, wherein the imaging sensing system generates a composite image for feature extraction including object identification and localization, edge detection and pattern recognition.

50. The system of claim **42**, wherein the means for acquiring the plurality of images of the scene is a means for acquiring the plurality of images of the scene substantially simultaneously.

51. A method of effectively increasing the dynamic range of a machine vision application, the method comprising:

capturing multiple images of a scene taken in different lighting conditions and with multiple image sensors;

searching an image of the multiple images for overexposed and underexposed portions based on a pixel value indicative of luminance;

reanalyzing the overexposed portions and the underexposed portions in the selected image corresponding to a spatially related portion in other images of the multiple images taken in different lighting conditions; and

analyzing at least one of the reanalyzed portions, wherein analyzing comprises feature extraction for distance determination based on relative locations of the features within images associated with the multiple image sensors.

52. The method of claim **51**, wherein an image sensor is used to capture the multiple images.

53. The method of claim **52**, wherein the image sensor is a digital camera.

54. The method of claim **51**, wherein the portions can be overlapping, noncontiguous, or a combination of overlapping and noncontiguous.

55. The method of claim **51**, wherein the different light conditions include one or more flashes of light.

56. The method of claim **51**, wherein the capturing multiple images occurs substantially simultaneously.

57. The method of claim **51**, additionally comprising generating a composite image for feature extraction based on the reanalyzed portions that are determined to be properly exposed.

58. The method of claim **51**, additionally comprising analyzing at least a portion of the image of the multiple images, wherein analyzing comprises feature extraction for distance determination based on relative locations of the features within images associated with the multiple image sensors.

59. An image sensing system for effectively increasing the dynamic range of a machine vision application, the system comprising:

means for acquiring an image of a scene a plurality of times under different lighting conditions and with multiple image sensors so as to obtain a plurality of images;

means for segmenting the images into a plurality of image regions, wherein each region is indicative of a selected dynamic range; and

means for analyzing one or more of the plurality of image regions for feature extraction including distance determination based on relative locations of the features within images associated with the multiple image sensors.

60. The system of claim **59**, wherein one or more image sensor is used to acquire the image.

61. The system of claim **60**, wherein the one or more image sensor is one or more digital camera.

62. The system of claim **59**, wherein the different lighting conditions include the use of one or more flashes of light.

63. The system of claim **59**, wherein the image sensing system contains at least two image sensors offset from each other.

64. The system of claim **63**, wherein the machine vision application utilizes corresponding image segments from the at least two image sensors to determine distance and/or orientation from the camera system to the object or feature being imaged.

65. The system of claim **64**, wherein the imaging sensing system generates a composite image for feature extraction including object identification and localization, edge detection and pattern recognition.

66. The system of claim **59**, wherein the imaging sensing system generates a composite image for feature extraction including object identification and localization, edge detection and pattern recognition.

67. The system of claim **59**, wherein the means for acquiring the image of the scene a plurality of times is a means for acquiring the image of the scene a plurality of times substantially simultaneously.

68. A method to improve the performance of a machine vision system by increasing the amount of data captured within images of a scene, the method comprising:

obtaining multiple images of a scene taken at different exposures and with multiple image sensors, wherein one of the multiple images is designated as a base image;

analyzing properly exposed portions of the base image;

analyzing regions in higher exposure images that correspond to pixels in the base image that were underexposed;

analyzing regions in the lower exposure images that correspond to pixels in the base image that were overexposed; and

applying feature extraction to at least one of the analyzed portions or regions for distance determination based on relative locations of the features within images associated with the multiple image sensors.

69. The method of claim **68**, wherein the features include landmarks for use with a vision based robot.

70. The method of claim **68**, wherein subregions of the higher exposure images remain overexposed and subregions of the lower exposure images remain underexposed, and wherein the method further comprises analyzing corresponding subregions of images with still higher and lower exposures.

71. The method of claim **68**, wherein the obtaining multiple images occurs substantially simultaneously.

72. The method of claim **68**, additionally comprising generating a composite image for feature extraction based on the regions and portions that are determined to be properly exposed.

73. A method of effectively increasing the dynamic range of an image sensor, the method comprising:

obtaining an image of a scene;

analyzing the image to identify one or more regions that are either too bright or too dark, wherein any one of the regions includes a plurality of pixels;

for any identified region that is identified as being too bright, obtaining a reduced exposure image;

for any identified region that is identified as being too dark, obtaining an increased exposure image;

wherein the obtaining a reduced exposure image and/or obtaining an increased exposure image are repeated as long as an average pixel value of any region is not within a selected limit; and

processing one or more of the properly exposed regions of the image and one or more properly exposed regions in the reduced and/or increased exposure images.

74. A method of effectively increasing the dynamic range of an image sensor, the method comprising:

obtaining an image of a scene;

analyzing the image to identify one or more regions that are either too bright or too dark, wherein any one of the regions includes a plurality of pixels;

for any identified region that is identified as being too bright, obtaining a reduced exposure image;

for any identified region that is identified as being too dark, obtaining an increased exposure image;

processing one or more of the properly exposed regions of the image and one or more properly exposed regions in the reduced and/or increased exposure images;

analyzing the properly exposed regions in the reduced and/or increased exposure images to identify one or more subregions that are either too bright or too dark;

for any identified subregion that is too bright, obtaining another reduced exposure image;

for any identified subregion that is too dark, obtaining another increased exposure image; and

processing the properly exposed region and, one or more properly exposed subregions in the reduced and/or increased exposure images.

75. A method to improve the performance of a machine vision system by increasing the amount of data captured within images of a scene, the method comprising:

obtaining multiple images of a scene taken at different exposures, wherein one of the multiple images is designated as a base image;

analyzing features in properly exposed portions of the base image;

analyzing features in regions in higher exposure images that correspond to pixels in the base image that were underexposed;

analyzing features in regions in the lower exposure images that correspond to pixels in the base image that were overexposed, wherein subregions of the higher exposure images remain overexposed and subregions of the lower exposure images remain underexposed;

analyzing features in corresponding subregions of images with still higher and lower exposures; and

processing at least one of the analyzed features with a machine vision application associated with mapping, navigation, or localization.

76. A method to effectively improve the performance of a machine vision system, the method comprising:

capturing multiple images of a scene taken at different exposures using a plurality of image sensors;

analyzing at least a selected one of the images by applying feature extraction;

if regions of the at least selected one analyzed image are too dark or too light,

analyzing portions in other images of the multiple images taken at higher exposures corresponding spatially to the regions in the selected analyzed image that are too underexposed, and

analyzing portions in other images of the multiple images taken at lower exposures corresponding spatially to the regions in the selected analyzed image that are too overexposed; and

determining a distance from the image sensors to at least one extracted feature based on relative locations of the features within images associated with the plurality of image sensors.

77. The method of claim **76**, wherein applying feature extraction includes matching at least one feature in images from one of the image sensors to a corresponding feature in images from another one of the image sensors.

78. The method of claim **76**, wherein a feature is recognized when there is sufficient contrast to match the feature between images of the image sensors.

79. The method of claim **76**, wherein the image sensors are offset from each other.

80. The method of claim **76**, wherein capturing multiple images of a scene taken at different exposures comprises capturing the multiple images at the same time at each of the image sensors.

81. The method of claim **76**, wherein capturing multiple images of a scene taken at different exposures comprises capturing the multiple images at different times at each of the image sensors.

82. The method of claim **76**, wherein capturing multiple images of a scene taken at different exposures comprises capturing the multiple images for at least one exposure at one image sensor that is different from at least another exposure at another image sensor.

83. The method of claim **76**, wherein the image sensors are configured to capture multiple images of a scene with the same or different exposure settings.

84. The method of claim **76**, wherein the analysis of the selected image or portions in other images is performed independently for the images captured by each of the image sensors.

85. The method of claim **76**, wherein the analysis of the selected image or portions in other images comprises using the same exposures for corresponding portions in the images captured from the image sensors.

86. A method of effectively increasing the dynamic range of a machine vision application, the method comprising:

capturing multiple images of a scene taken at different exposures using a plurality of image sensors;

analyzing a selected image of the multiple images for overexposed and underexposed portions based on a pixel value indicative of luminance;

analyzing portions in other images of the multiple images taken at lower exposures corresponding spatially to the overexposed portions in the selected image;

analyzing portions in other images of the multiple images taken at higher exposures corresponding spatially to the underexposed portions in the selected image; and

applying feature extraction to at least one of the analyzed portions for distance determination based on relative locations of the features within images associated with the plurality of image sensors.

87. The method of claim **86**, wherein the image sensors are offset from each other.

88. The method of claim **86**, wherein capturing multiple images of a scene taken at different exposures comprises capturing the multiple images at the same time at each of the image sensors.

89. The method of claim **86**, wherein capturing multiple images of a scene taken at different exposures comprises capturing the multiple images at different times at each of the image sensors.

90. The method of claim **86**, wherein capturing multiple images of a scene taken at different exposures comprises capturing the multiple images for at least one exposure at one image sensor that is different from at least another exposure at another image sensor.

91. The method of claim **86**, wherein the image sensors are configured to capture multiple images of a scene with the same or different exposure settings.

92. The method of claim **86**, wherein the analysis of the selected image or portions in other images is performed independently for the images captured by each of the image sensors.

93. The method of claim **86**, wherein the analysis of the selected image or portions in other images comprises using the same exposures for corresponding portions in the images captured from the image sensors.

94. The method of claim **86**, wherein applying feature extraction includes matching at least one feature in images from one of the image sensors to a corresponding feature in images from another one of the image sensors.

95. The method of claim **86**, wherein the determination of distance is from the image sensors to an extracted feature.

96. The method of claim **95**, wherein the extracted feature is recognized when there is sufficient contrast to match the feature between images of the image sensors.

97. An image sensing system for effectively increasing the dynamic range of a machine vision application, the system comprising:

means for acquiring an image of a scene a plurality of times with different exposures to obtain a plurality of images;

means for segmenting the images into a plurality of image regions, wherein each region is indicative of a selected dynamic range;

means for analyzing one or more of the plurality of image regions for feature extraction including object identification or distance determination; and

wherein the image sensing system includes at least two image sensors offset from each other, and wherein the machine vision application utilizes corresponding image segments from the at least two image sensors to determine distance and/or orientation from the camera system to the object or feature being imaged.

98. An image acquisition system for effectively increasing the dynamic range of a machine vision application, the system comprising:

means for acquiring a plurality of images of a scene, each image having a different exposure;

means for obtaining a plurality of image regions, wherein each region contains portions of a particular image with good dynamic range from the plurality of images;

means for analyzing one or more of the plurality of image regions for feature extraction including distance determination; and

wherein the image sensing system contains at least two image sensors offset from each other, and wherein the machine vision application utilizes corresponding image segments from the at least two image sensors to determine distance and/or orientation from the camera system to the object or feature being imaged.

99. An image sensing system for effectively increasing the dynamic range of a machine vision application, the system comprising:

means for acquiring an image of a scene a plurality of times under different lighting conditions so as to obtain a plurality of images;

means for segmenting the images into a plurality of image regions, wherein each region is indicative of a selected dynamic range;

means for analyzing one or more of the plurality of image regions for feature extraction including distance determination; and

wherein the image sensing system contains at least two image sensors offset from each other, and wherein the machine vision application utilizes corresponding image segments from the at least two image sensors to determine distance and/or orientation from the camera system to the object or feature being imaged.

* * * * *